SHIPYARD CSDC DC101234.103.001

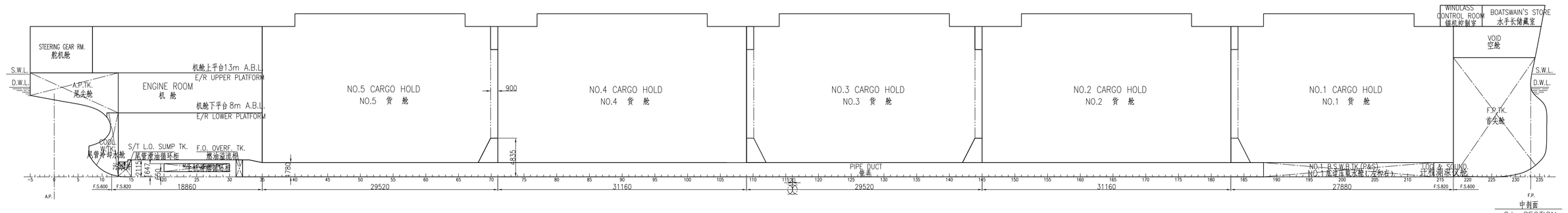

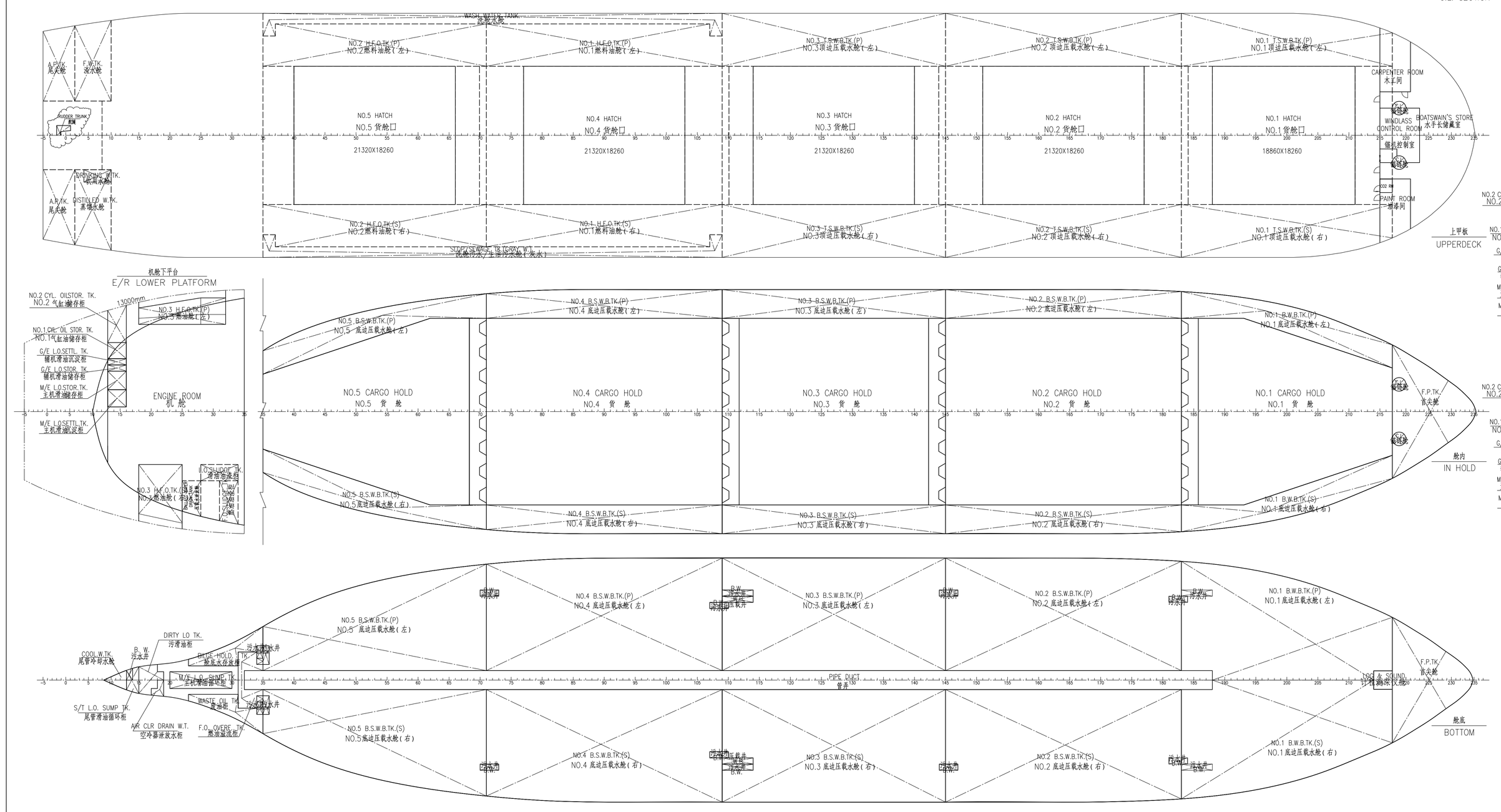

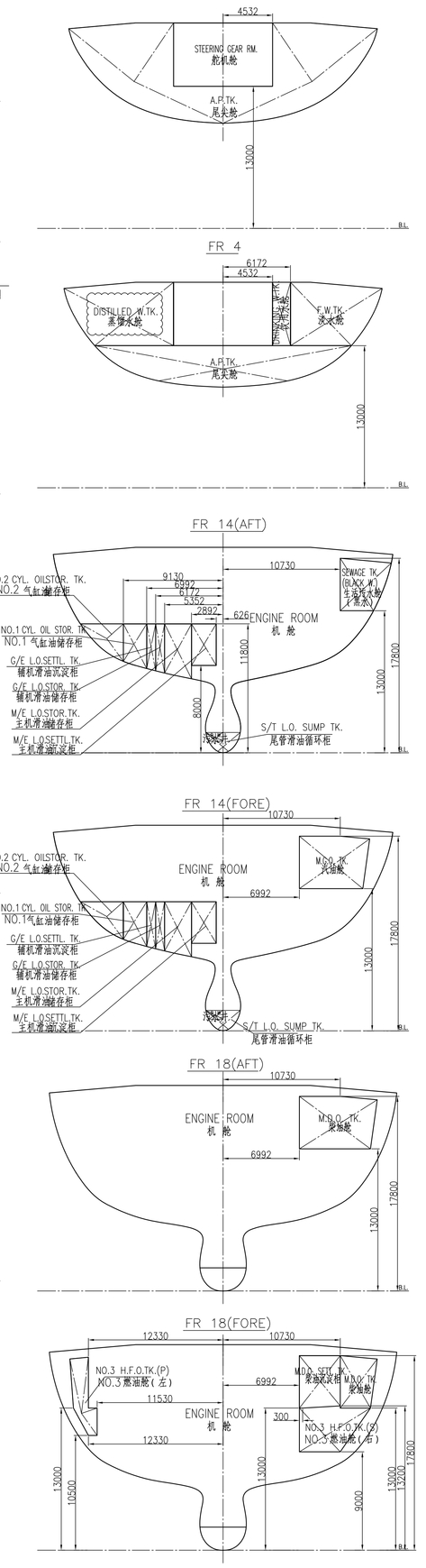

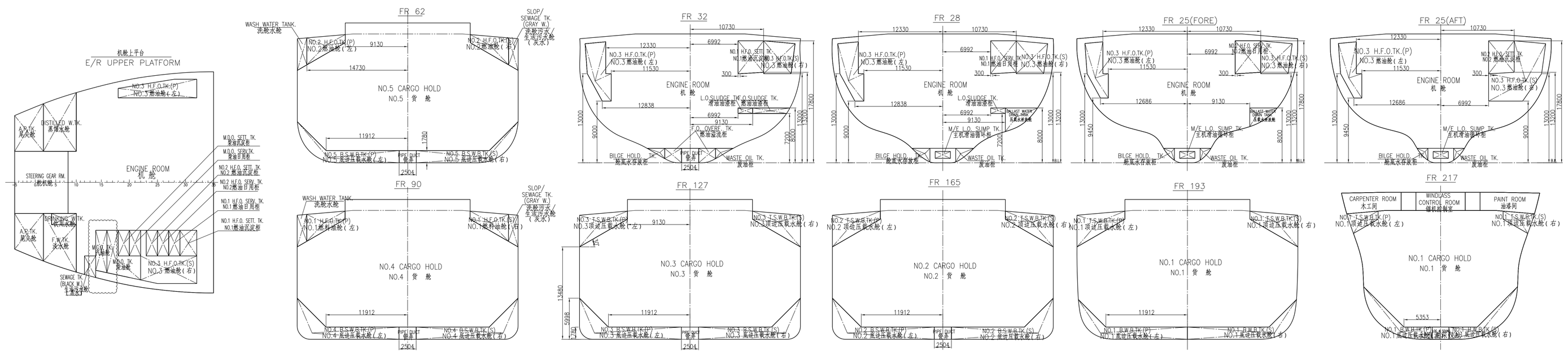

NAME	FRMN #	FRMAX #	VNET m3	L.C.G m	T.C.G m	V.C.G m	IMAX m4
CAPACITY OF GRAIN FILL=1.00							
NO.1 CARGO HOLD	183	217	12599.7	161.01	-0.00	10.66	67114.7
NO.2 CARGO HOLD	145	183	15963.5	131.84	0.00	10.30	89507.0
NO.3 CARGO HOLD	109	145	14185.2	101.50	0.00	10.41	80261.6
NO.4 CARGO HOLD	71	109	15963.5	71.16	0.00	10.30	89507.0
NO.5 CARGO HOLD	35	71	13519.6	41.06	0.00	10.76	81425.9
SUBTOTAL			72231.5				

NAME	FRMN #	FRMAX #	VNET m3	WEIGHT t	L.C.G m	T.C.G m	V.C.G m	IMAX m4
CAPACITY OF Water Ballast Density: 1.025 t/m3FILL=1.00								
A.P.TK.	AFT	13	1109.7	1137.5	2.03	0.02	12.85	12075.0
F.P.TK.	217	FORE	2043.5	2094.6	179.48	0.00	7.93	5095.0
NO.1 B.S.W.B.TK.(P)	183	217	868.5	890.2	161.03	8.53	1.99	5641.2
NO.1 B.S.W.B.TK.(S)	183	217	868.5	890.2	161.03	-8.53	1.99	5641.2
NO.1 T.S.W.B.TK.(P)	183	217	498.5	511.0	160.20	13.10	16.82	719.8
NO.1 T.S.W.B.TK.(S)	183	217	498.5	511.0	160.20	-13.10	16.82	719.8
NO.2 B.S.W.B.TK.(P)	145	183	1048.1	1074.3	131.75	10.04	1.50	8441.2
NO.2 B.S.W.B.TK.(S)	145	183	1048.1	1074.3	131.75	-10.04	1.50	8441.2
NO.2 T.S.W.B.TK.(P)	145	183	620.1	635.6	131.84	13.32	16.72	890.7
NO.2 T.S.W.B.TK.(S)	145	183	620.1	635.6	131.84	-13.32	16.72	890.7
NO.3 B.S.W.B.TK.(P)	109	145	1001.0	1026.1	101.50	10.08	1.49	8094.6
NO.3 B.S.W.B.TK.(S)	109	145	1001.0	1026.1	101.50	-10.08	1.49	8094.6
NO.3 T.S.W.B.TK.(P)	109	145	587.4	602.1	101.50	13.32	16.72	843.8
NO.3 T.S.W.B.TK.(S)	109	145	587.4	602.1	101.50	-13.32	16.72	843.8
NO.4 B.S.W.B.TK.(P)	71	109	1039.7	1065.7	71.34	10.00	1.50	8325.6
NO.4 B.S.W.B.TK.(S)	71	109	1039.7	1065.7	71.34	-10.00	1.50	8325.6
NO.5 B.S.W.B.TK.(P)	35	71	998.8	1023.8	39.66	9.57	2.87	4216.4
NO.5 B.S.W.B.TK.(S)	35	71	998.8	1023.8	39.66	-9.57	2.87	4216.4
SUBTOTAL			16477.4	16889.7				
CAPACITY OF Heavy Water Ballast Density: 1.025 t/m3FILL=1.00								
NO.3 CARGO HOLD	109	145	14185.2	14539.8	101.50	0.00	10.41	80261.6
SUBTOTAL			30662.6	31429.5				

NAME	FRMN #	FRMAX #	VNET m3	98%VNET m3	WEIGHT t	L.C.G m	T.C.G m	V.C.G m	IMAX m4
CAPACITY OF Heavy Fuel Oil Density: 0.98 t/m3FILL=0.98									
NO.1 H.F.O.TK.(P)	71	109	428.2	419.6	411.2	70.85	12.40	17.03	444.8
NO.1 H.F.O.TK.(S)	71	109	428.2	419.6	411.2	70.85	-12.40	17.03	444.8
NO.2 H.F.O.TK.(P)	35	71	405.1	397.0	389.1	41.13	12.40	17.03	420.8
NO.2 H.F.O.TK.(S)	35	71	405.1	397.0	389.1	41.13	-12.40	17.03	420.8
NO.3 H.F.O.TK.(P)	18	32	204.2	200.1	196.1	18.57	13.20	13.76	29.7
NO.3 H.F.O.TK.(S)	18	32	301.2	295.2	289.2	17.44	-11.38	13.54	230.3
NO.1 H.F.O.SERV.TK.	27	29	28.3	27.7	27.2	20.32	-8.85	15.45	7.1
NO.1 H.F.O.SETT.TK.	29	32	42.4	41.6	40.7	22.37	-8.85	15.45	10.7
NO.2 H.F.O.SERV.TK.	25	27	28.3	27.7	27.2	18.68	-8.85	15.45	7.1
NO.2 H.F.O.SETT. TK.	23	25	28.3	27.7	27.2	17.04	-8.85	15.45	7.1
SUBTOTAL			2299.2	2253.2	2208.2				
CAPACITY OF Diesel Oil Density: 0.85 t/m3 FILL=0.98									
M.G.O.TK.	14	16	48.1	47.1	40.0	9.67	-10.12	15.41	33.5
M.D.O.TK.	16	22	101.7	99.7	84.7	12.57	-11.36	15.39	74.0
M.D.O.SERV.TK.	20	22	28.3	27.7	23.6	14.58	-8.85	15.45	7.1
M.D.O.SETT.TK.	18	20	28.3	27.7	23.6	12.94	-8.85	15.45	7.1
SUBTOTAL			206.3	202.2	171.8				

NAME	FRMN #	FRMAX #	VNET m3	98%VNET m3	WEIGHT t	L.C.G m	T.C.G m	V.C.G m	IMAX m4
CAPACITY OF Lubrication oil Density: 0.9 t/m3FILL=0.98									
M/E L.O.SUMP TK.	20	30	17.8	17.4	15.7	17.86	0.00	1.15	7.5
NO.2 CYL.OIL STOR. T.	13	16	21.4	21.0	18.9	9.35	10.62	10.45	13.9
NO.1 CYL.OIL STOR. T.	13	16	20.2	19.8	17.8	9.30	8.03	9.83	2.0
M/E L.O.STOR.TK.	13	16	26.6	26.1	25.5	9.29	4.10	9.35	3.1
M/E L.O.SETT.TK.	13	16	20.8	20.3	23.9	9.25	1.76	9.90	2.4
G/E L.O.STOR.TK.	13	16	9.0	8.8	7.9	9.29	5.76	9.53	0.1
G/E L.O.SETT.TK.	13	16	8.6	8.4	7.5	9.29	6.58	9.63	0.1
SUBTOTAL			124.4	121.8	117.2				

NAME	FRMN #	FRMAX #	VNET m3	WEIGHT t	L.C.G m	T.C.G m	V.C.G m	IMAX m4
CAPACITY OF Fresh Water Density: 1 t/m3FILL=1.00								
F.W.T.	2	10	244.4	244.4	3.65	9.09	15.94	428.8
DISTILLED W.TK.	2	10	210.8	210.8	3.56	-9.69	15.95	303.7
DRINKING W.TK.	4	10	33.6	33.6	4.20	-5.35	15.90	1.3
COOL.WATER TK.	AFT	13	27.0	27.0	7.03	0.00	4.36	137.7
SUBTOTAL			515.8	515.8				

NAME	FRMN #	FRMAX #	VNET m3	WEIGHT t	L.C.G m	T.C.G m	V.C.G m	IMAX m4
CAPACITY OF Miscellaneous Density: 1 t/m3FILL=1.00								
WASH WATER TK.	35	109	374.2	374.2	56.40	15.38	16.04	26.1
SLOP/SEVAGE TK.(GRAY W.)	35	109	374.2	374.2	56.40	-15.38	16.04	26.1
BILGE HOLD TK.	23	35	24.0	24.0	21.63	3.40	1.43	32.8
F.O.OVERF.TK	31	35	34.5	34.5	24.25	-0.00	1.07	108.6
WASTE OIL TK.	23	35	24.0	24.0	21.63	-3.40	1.43	32.8
S/T L.O. SUMP TK.	13	15	6.3	6.3	8.99	-0.09	1.11	3.3
L.O.SLUDGE TK.	28	34	8.2	8.2	22.78	-8.06	7.60	4.0
F.O.SLUDGE TK.	31	34	10.2	10.2	24.03	-11.78	7.61	34.5
SEWAGE TK.	12	14	28.3	28.3	8.03	-12.65	15.47	13.0
AIR CLR DRAIN W.T.	17	19	3.9	3.9	12.33	-1.06	1.26	0.9
DIRTY LD TK.	15	19	16.7	16.7	11.05	0.15	1.18	10.6
BALLAST WATER DRAIN TK.	25	28	20.5	20.5	19.18	-10.76	6.81	17.4
SUBTOTAL			925.2	925.2				

NOTE:

1) T.C.G. (−) Starboard side, (+) Port side
2) Origin coordinate of L.C.G. is located in frame 0(A.P.)

REFERENCE DRAWING:

GENERAL ARRANGEMENT DC101234.100.001
ARRANGEMENT OF ER. DC101234.400.001

会签:
审核: 李 涛
批准: 李世雄

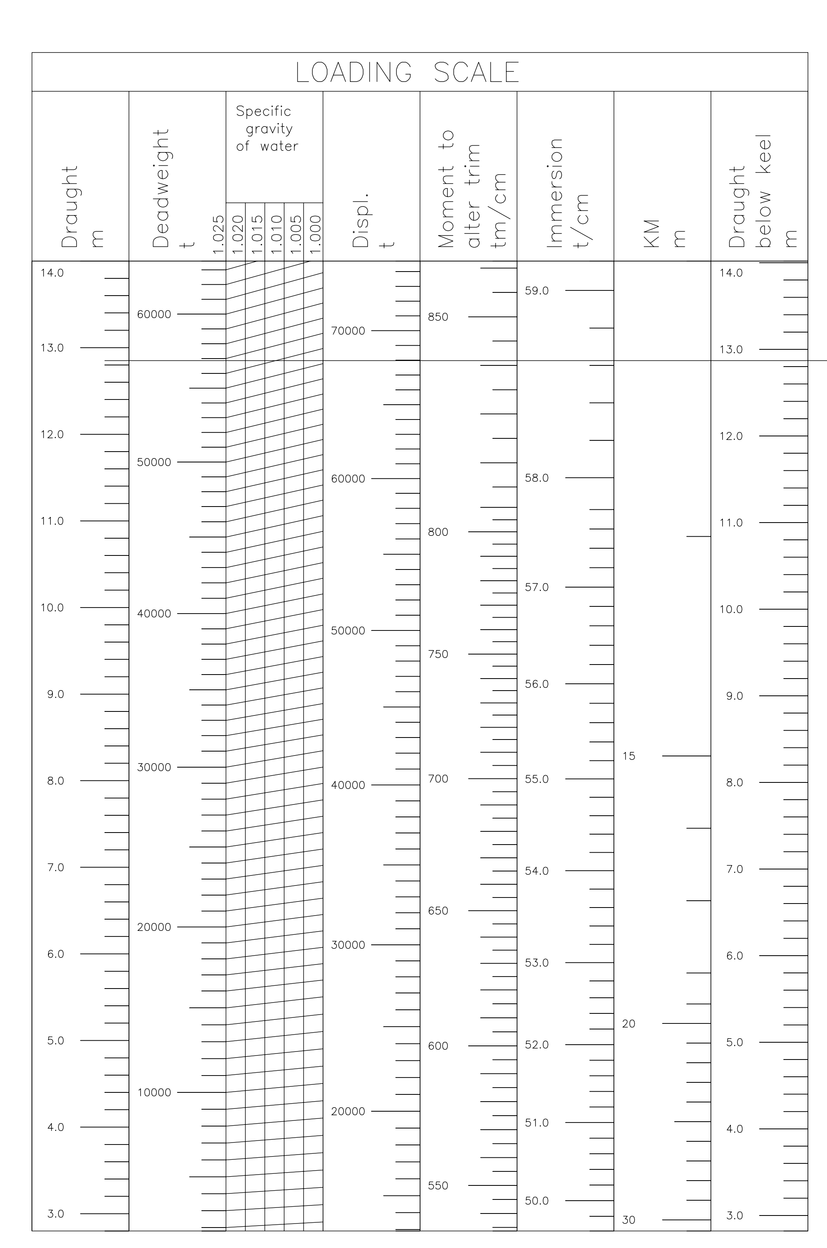

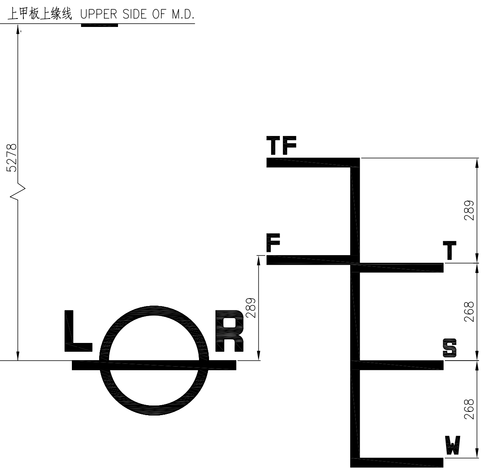

PRINCIPAL DIMENSIONS

总 长 LENGTH O.A.	~189.99 m
垂线间长 LENGTH B.P.	185.00 m
型 宽 BREADTH M.D.	32.26 m
型 深 DEPTH M.D.	18.10 m
设计吃水 DESIGNED DRAFT	11.20 m
结构吃水 SCANTLING DRAFT	12.85 m
主 机 MAIN ENGINE	MAN-B&W 6S50MC-C Mk8.1 Tier II
MCR	9960kW × 127.0 r/min
SMCR	9950kW × 125.0 r/min
CSR(BOE SMCR)	8550kW × 120.7r/min
船员定额COMPLEMENT	28 Persons
船 级CLASSIFICATION	✠100A1, Bulk Carrier, CSR ,BC-A, Holds 2,4 May be empty, GRAB[20], ESP, LI, ShipRight(CM,ACS(B)), *IWS, ECO ✠ LMC, UMS Descriptive notes: ShipRight(SCM,BWAMP(S+F)), Part higher tensile steels, Green Passport

船号 HULL NO.	NB003-1/2/3/4/5	57,000 DWT 散货船	CSDC DC101234.103.001
船级社 CLASS.	LR	57,000 DWT BULK CARRIER	CODE
设计 DESIGNED	张金亮 10-07-01	舱容图 CAPACITY PLAN	完工设计 FINAL DESIGN
校对 CHECKED	汤晓鹏 10-07-02		版本 REV. 0
审核 REVIEWED	吴伟强 10-07-05		比例 SCALE 1:250
标准 STANDARDIZED	潘江红 10-07-03		重量 WEIGHT —
审定 APPROVED	王伟强 10-07-08		页数 PAGE 1/1

中船重工船舶设计研究中心有限公司 China Ship Design & Research Center Co.,Ltd.

船厂 BUILDER 天津新港船舶重工有限责任公司 Tianjin Xingang Shipbuilding Heavy Industry Co.,Ltd.

图纸履历PLAN HISTORY						
日期 DATE	版本 REVISION	标记 MARK	说 明 DESCRIPTION	设计 DESIGNED	校对 CHECKED	审定 APPROVED
2010-07-01	A		初步提交予厂方确认意见 Submitted to owner for Approval and class for Information	张金亮	汤晓鹏	吴伟强
2010-11-05	0		二次提交,机舱油舱更改 For working, modified ER oil tanks	张金亮	汤晓鹏	吴伟强